PROPRIETARY AND CONFIDENTIAL
THE INFORMATION CONTAINED IN THIS DRAWING IS THE SOLE PROPERTY OF UNICE E-O SERVICES INC. ANY REPRODUCTION IN PART OR AS A WHOLE WITHOUT THE WRITTEN PERMISSION OF UNICE E-O SERVICES INC IS PROHIBITED.

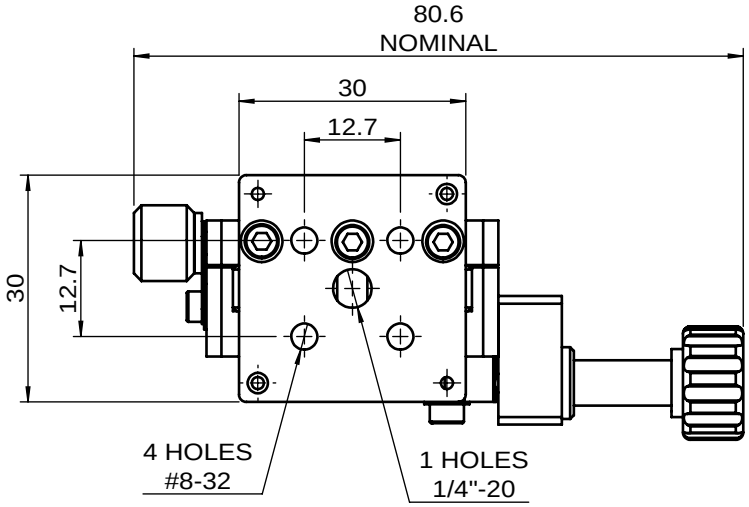

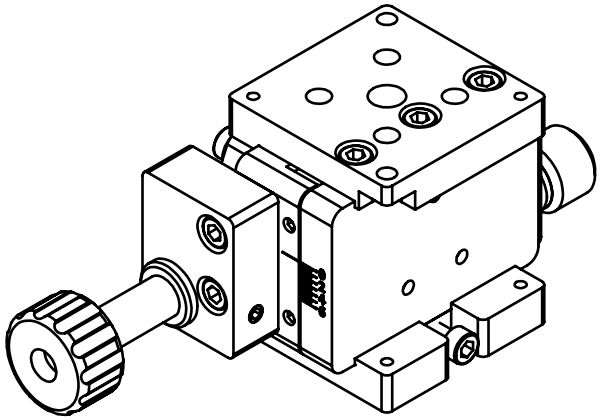

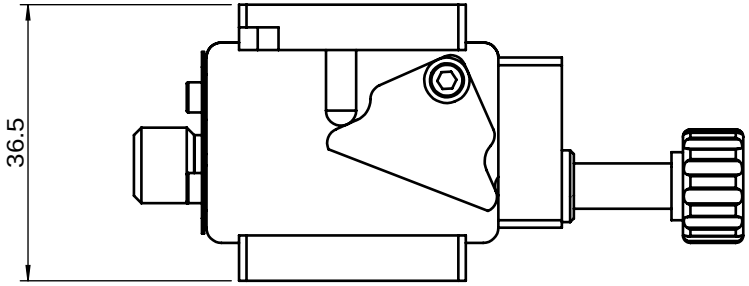

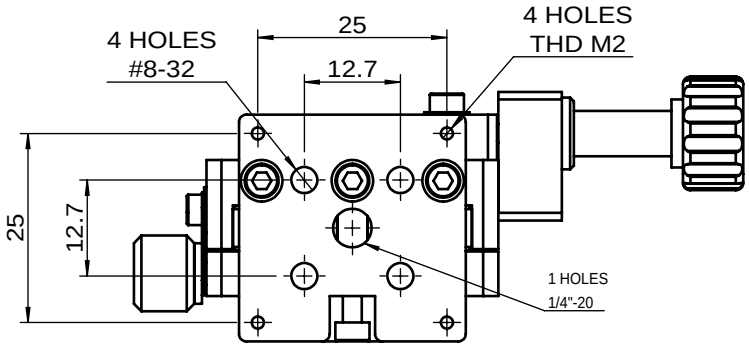

UNIT:m/m

Unice E-O Services Inc. No.5, Andong Rd., Chung Li District, Taoyuan City 32063, Taiwan, R.O.C.			TITLE:	56VTS-1
			DWG. NO.	56VTS-1
	NAME	DATE	MATERIAL:	N/A
DRAWN	Terry	2017/10/2		
ENG APPR.	Johnny	2017/10/2	SCALE:	1:1
			REV	0