PROPRIETARY AND CONFIDENTIAL
THE INFORMATION CONTAINED IN THIS DRAWING IS THE SOLE PROPERTY OF UNICE E-O SERVICES INC. ANY REPRODUCTION IN PART OR AS A WHOLE WITHOUT THE WRITTEN PERMISSION OF UNICE E-O SERVICES INC IS PROHIBITED.

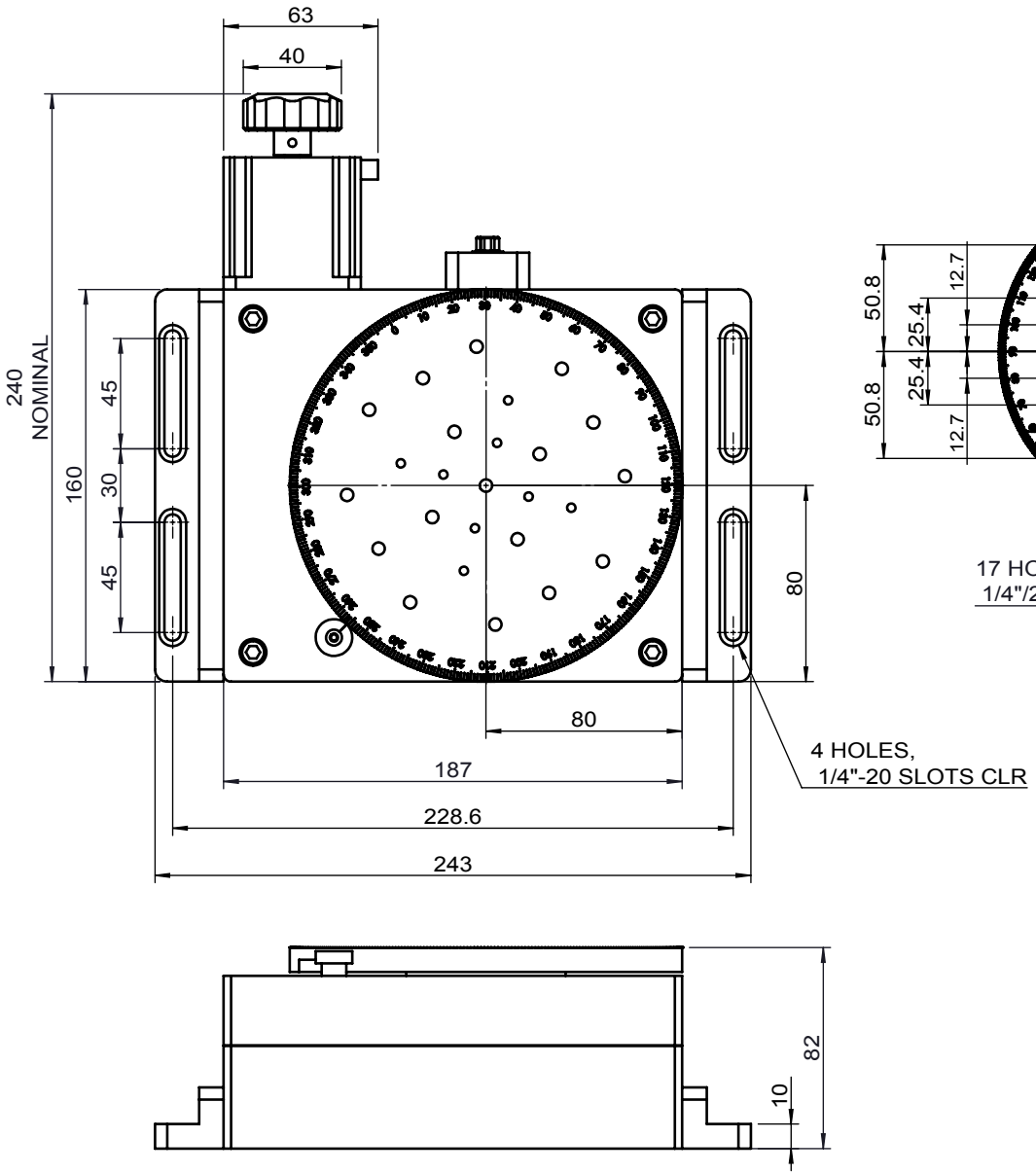

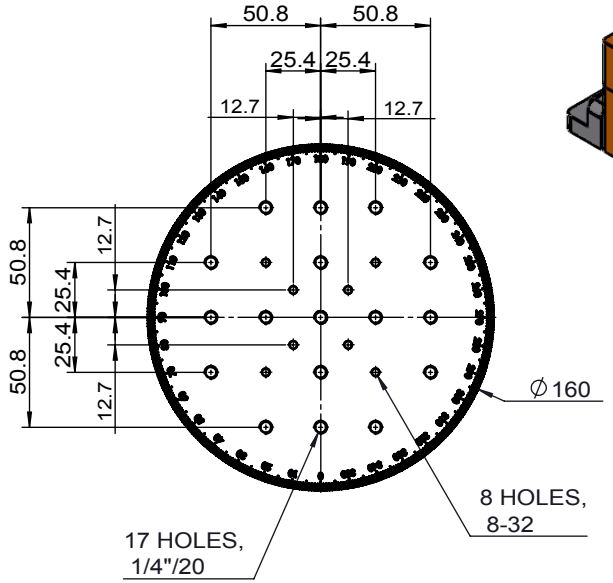

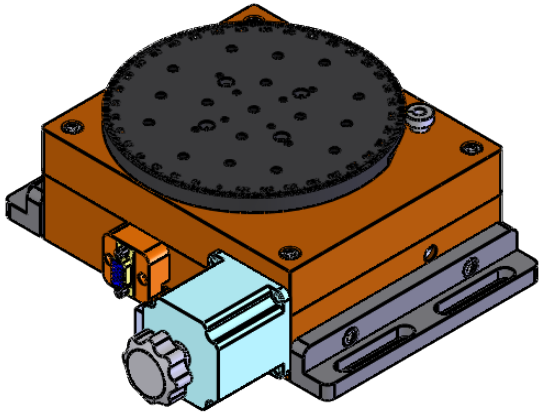

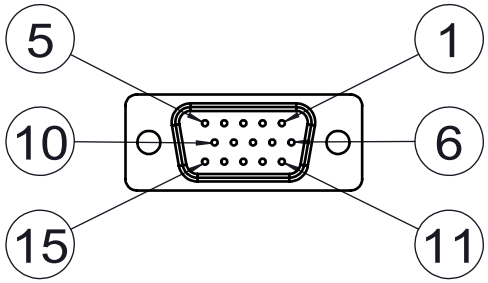

NO	Description
1	N/A
2	N/A
3	N/A
4	N/A
5	Home Limit
6	/A
7	A
8	/B
9	B
10	COM
11	CA
12	CB
13	N/A
14	N/A
15	N/A

UNIT:m/m

Unice E-O Services Inc.
No.5, Andong Rd., Chung Li District,
Taoyuan City 32063, Taiwan, R.O.C.

	NAME	DATE
DRAWN	Sky	2018/10/8
ENG APPR.	Johnny	2018/10/8

TITLE:	08MRX-3
DWG. NO.	08MRX-3
MATERIAL:	N/A
SCALE:	1:3
REV	0